Control elements of the device
1. Control elements of the front panel

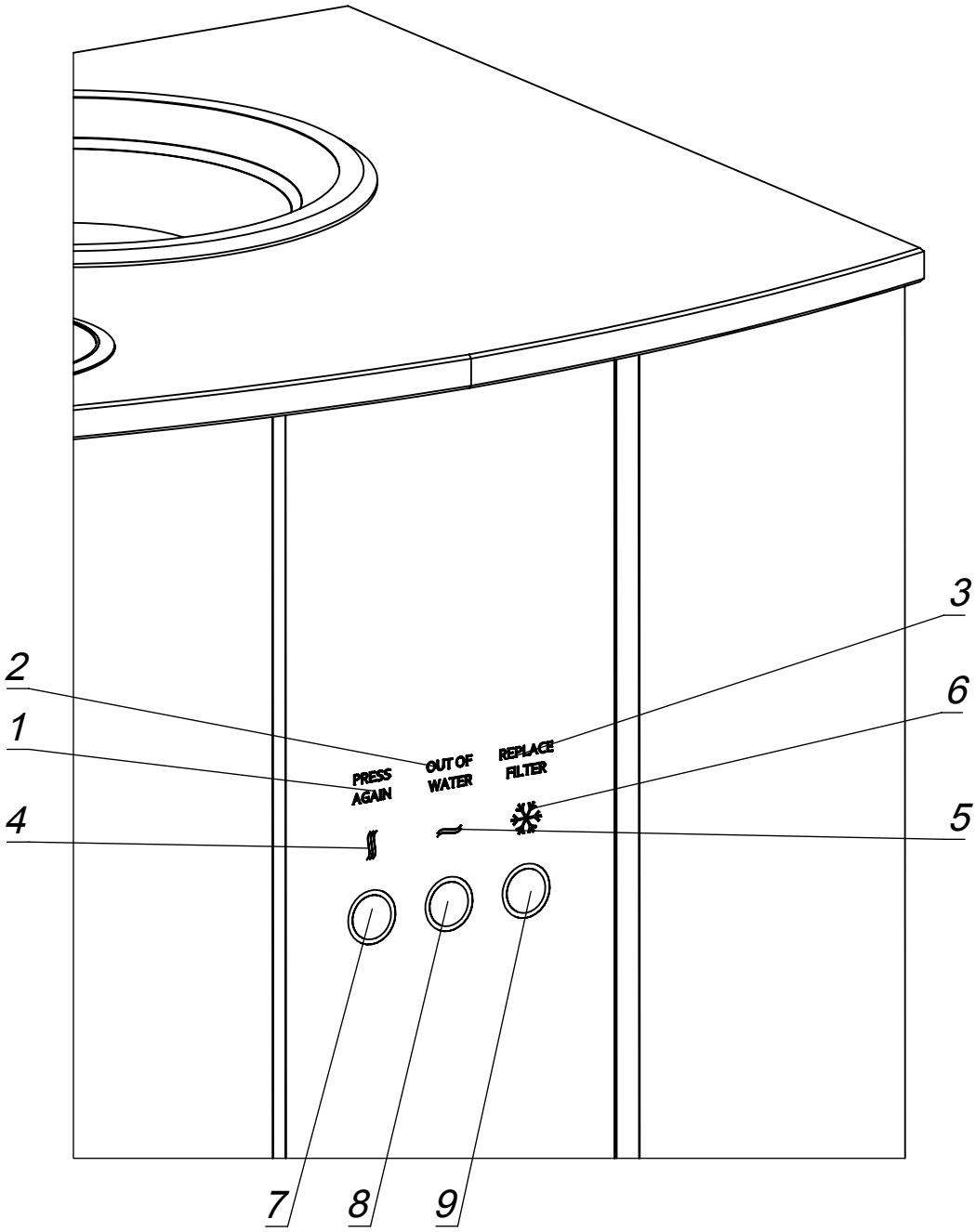

Nr.	Description
1	Indicator "Press Again"
2	Indicator "Out of water"
3	Indicator "Replace filter"
4	Indicator "Hot water"
5	Indicator "Ambient water"
6	Indicator "Cold water"
7	Dispensing button "Hot water"
8	Dispensing button "Ambient water"
9	Dispensing button "Cold water"